REV	DESCRIPTION	DRAWN	DATE

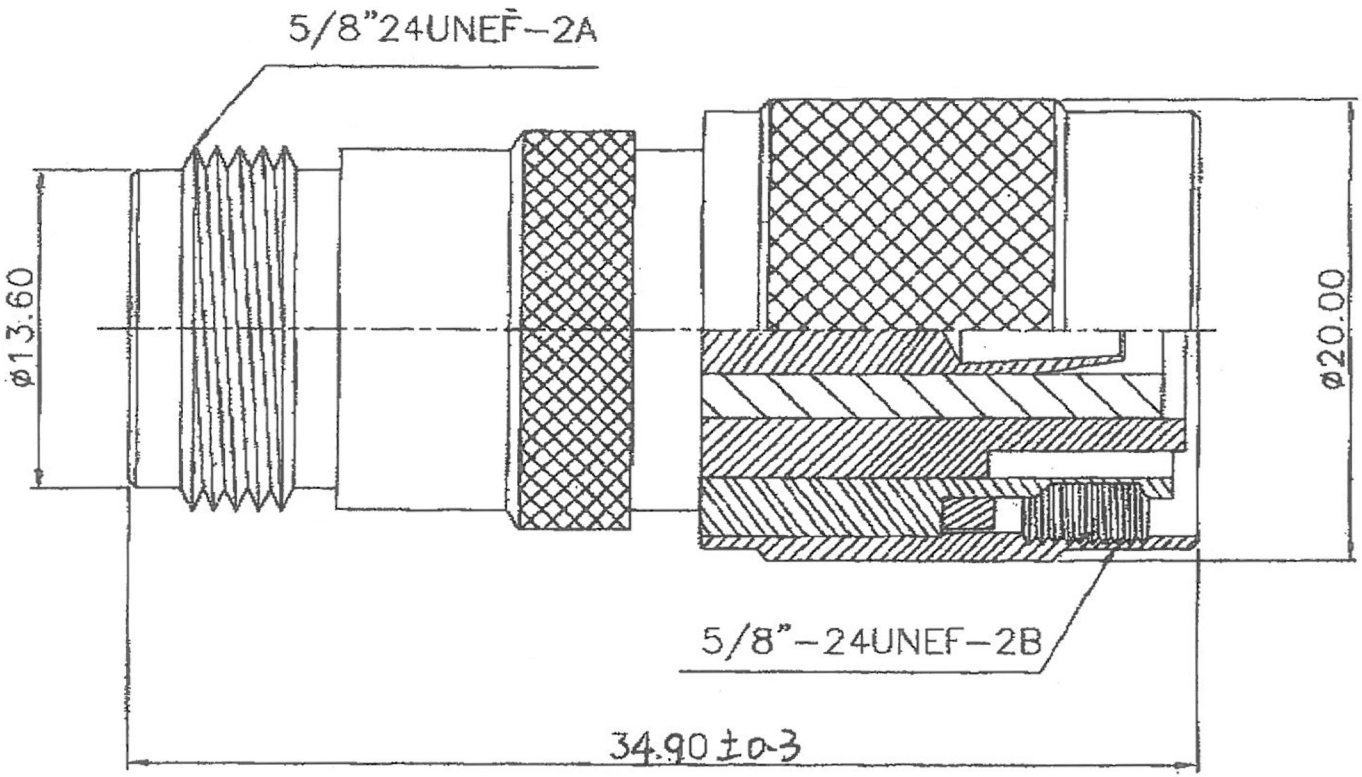

NO	Description	Q'ty	Material	Finish
3	DIELECTRIC	1	TEFLON	NONE
2	PIN	1	BRASS	GOLD
1	BODY	1	BRASS	NICKEL

UNLESS OTHERWISE SPECIFIED
1. REMOVE ALL BURRS.
2. BREAK ALL CORNERS & EDGES C0.15 MAX.
3. CHAMFER 1ST & LAST THREADS 45°.
4. DIAMETERS ON COMMON CENTERS TO BE CONCENTRIC WITHIN 0.1 T.I.R.
5. ALL DIMENSIONS ARE AFTER PLATING.

* MAJOR DIMENSION

UNLESS OTHERWISE NOTED TOLERANCES
0.5–6=±0.2
6–30=±0.4
30–120=±0.6
120–315=±1.0
ANGLES=±1°

SCALE 5/1 | UNIT MM

APPROVED
CHECKED
DRAWN
DRAWN DATE 06/12/22

equip

TITLE N MALE RP TO N FEMALE

DRAWING NO. 455014 REV A

FILE NO. D:\DWG\N MALE RP TO N FEMALE\N-1356-2-RP-TGN